Paxtonstraat 23
8013 RP Zwolle
Netherlands

+31(0)38 - 420 90 20
www.element4.nl
info@element4.nl

TENORE 240

SPECIFICATIONS

Burner:	Multi burner
Type of fireplace:	Gas fires
Net natural gas capacity (min-max) G25:	3,5 - 17,6 kW
Net natural gas capacity (min-max) G20:	3,5 - 17,6 kW
Net propane capacity (min-max) G31:	6,3 - 19,0 kW
Efficiency:	89%
Black steel:	(Standard)
Black glass:	(Optional)
Connect to home automation:	(Optional)
Operation via app:	(Optional)
Powerfan:	(Optional)
Control panel:	(Optional)
Wall switch:	(Optional)
Remote control:	(Standard)
Convection schedule (s):	(Optional)
Puck:	(Optional)
Energielabel:	A
Website:	https://www.element4.nl/en/fireplace/tenore-240

Paxtonstraat 23
8013 RP Zwolle
Netherlands
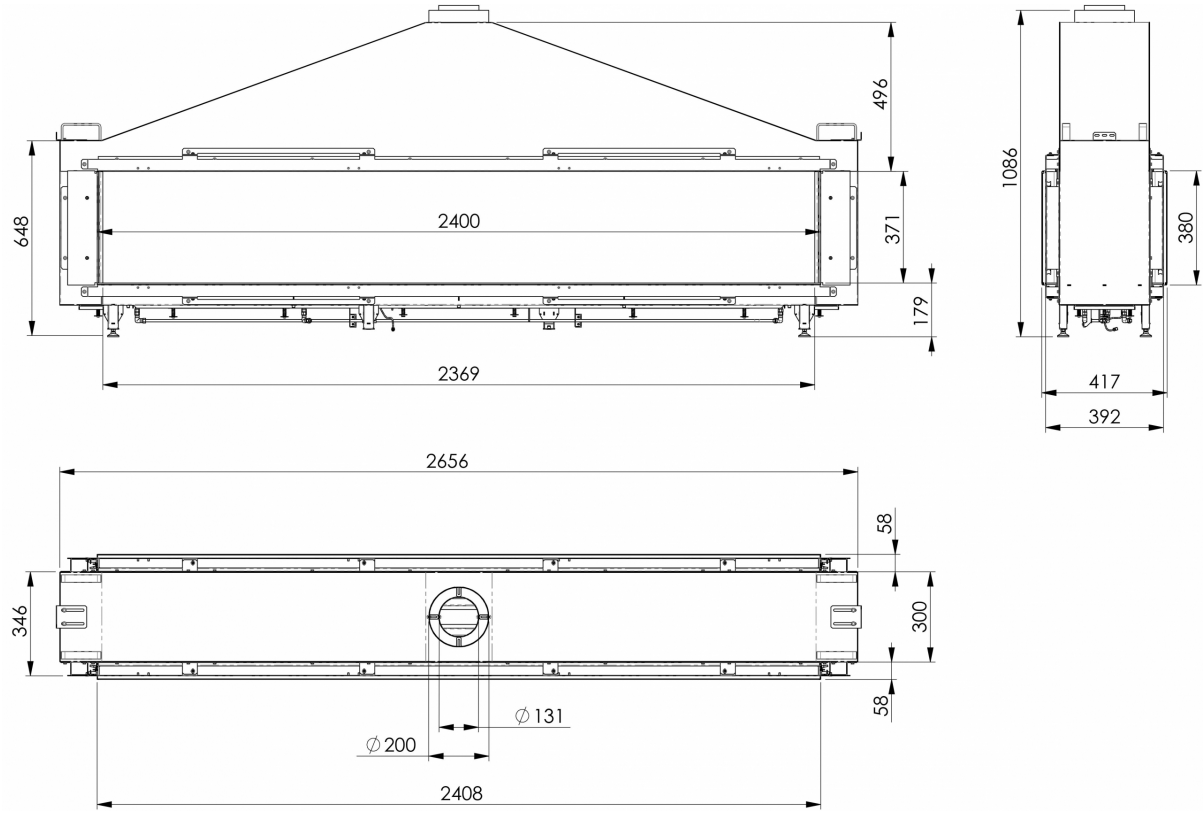
+31(0)38 - 420 90 20
www.element4.nl
info@element4.nl